T0-100 CAN: 10-LEAD

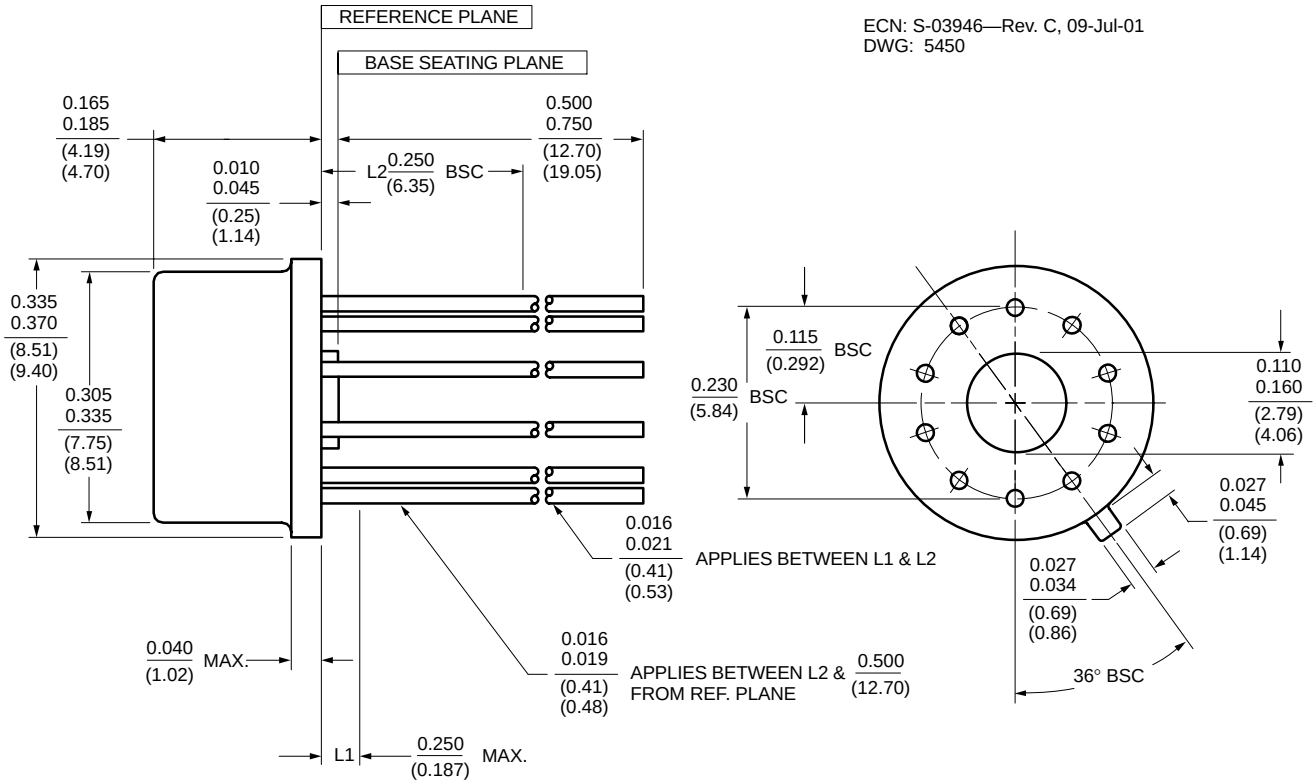

All dimensions in brackets () are millimeters, otherwise inches